REVISION HISTORY			
REV.	DESCRIPTION	DATE	DRAWN BY
1	ORIGINAL PRINT	3/21/2023	E. SCIME

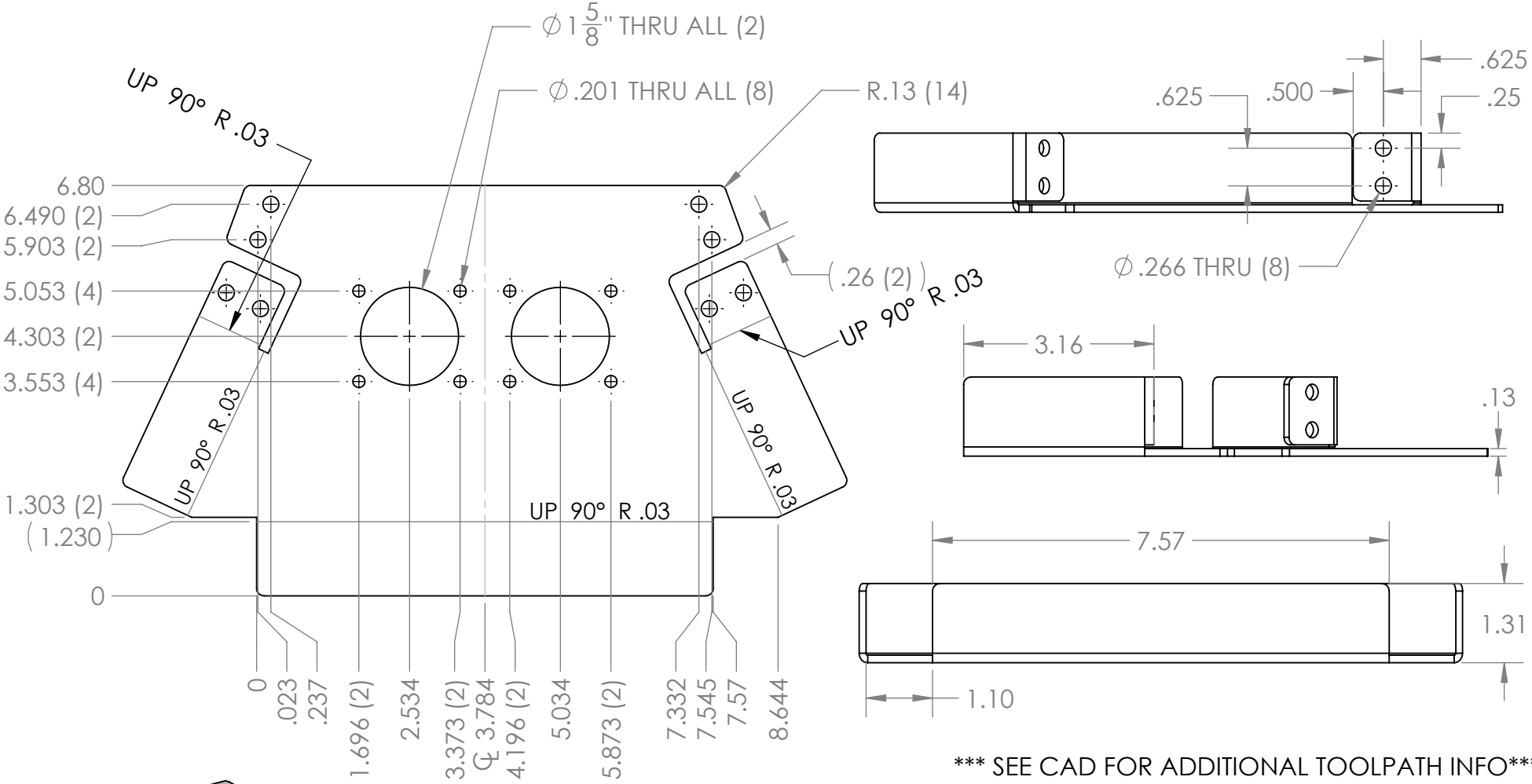

*** SEE CAD FOR ADDITIONAL TOOLPATH INFO***

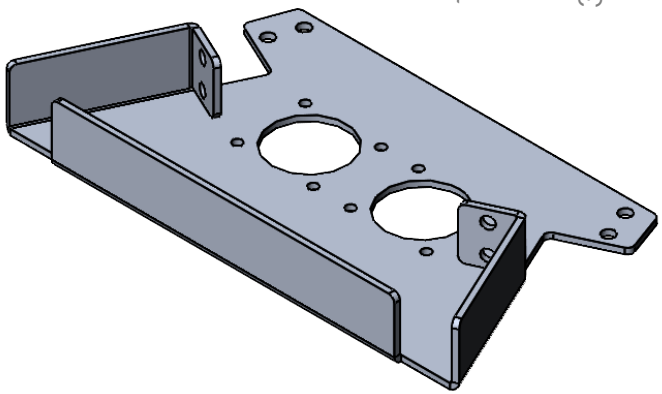

UNLESS OTHERWISE SPECIFIED:	COMMENTS:
DIMENSIONS ARE IN INCHES	DUAL DIMENSIONS ARE IN MILLIMETERS.
TOLERANCES:	BREAK ALL SHARP EDGES.

TOLERANCES:	
FRACTIONAL	±1/16
ANGULAR: MACH	±1°
ANGULAR: BEND	±5°
ONE PLACE DECIMAL	±0.1
TWO PLACE DECIMAL	±0.01
THREE PLACE DECIMAL	±0.005
FOUR PLACE DECIMAL	±0.0005

MATERIAL: 5052 AL

FINISH: DEBURRED

DO NOT SCALE DRAWING

	NAME	DATE
CHECKED	NM	3/22/23
ENG APPR.		
MFG APPR.		
Q.A.		

AndyMark

TITLE:

APEX BRACKET (BLOCKER)

SIZE	DWG. NO.	REV
A	am-5116	1

SCALE: 1:2.5 SHEET 1 OF 1

5 4 3 2 1